Practice sheet 2

- **Each question carry 1 marks and time given for each is 2 min.**
- **All questions are compulsory.**

1. A wire of length /, made of material resistivity ρ is cut into two equal parts. The resistivity of the two parts are equal to,
   (a) ρ (b) 1/ ρ (c) 2 ρ (d) 4 ρ
2. The temperature of a conductor is increased. The graph best showing the variation of its resistance is

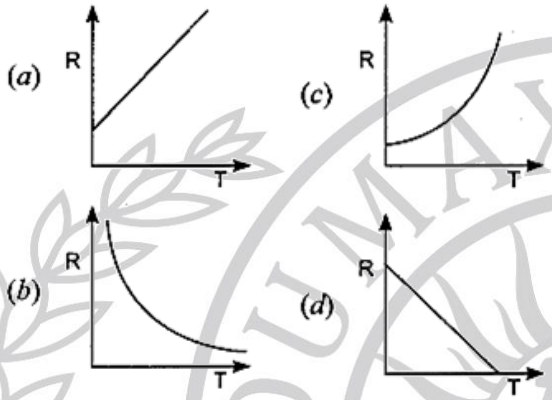

3. A battery of 10 volt carries 20,000 C of charge through a resistance of 20 Ω. The work done in 10 seconds is
   (a) $2 \times 10_3$ joule (b) 2×10^5joule
   (c) 2×10^4 joule (d) 2×10^2 joule
4. A boy records that 4000 joule of work is required to transfer 10 coulomb of charge between two points of a resistor of 50 Ω. The current passing through it is
   (a) 2 A (b) 4 A
   (c) 8 A (d) 16 A
5. The resistance whose V-I graph is given below is

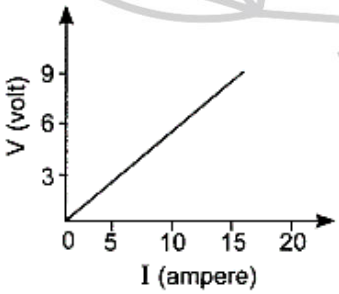

   (a) $\frac{5}{3}\ \Omega$ (b) $\frac{3}{5}\ \Omega$
   (c) $\frac{5}{2}\ \Omega$ (d) $\frac{2}{5}\ \Omega$
6. Two wires of same length and area made of two materials of resistivity ρ_1 and ρ_2 are connected in series to a source of potential V. The equivalent resistivity for the same area is
   (a) $\rho_1 + \rho_2$ (b) $\frac{\rho_1\rho_2}{\rho_1+\rho_2}$
   (c) $\frac{(\rho_1+\rho_2)}{\rho_1\rho_2}$ (d) $\left(\frac{|\rho_1+\rho_2|}{2}\right)$
7. Two devices are connected between two points say A and B in parallel. The physical quantity that will remain the same between the two points is
   (a) current (b) voltage
   (c) resistance (d) None of these
8. Two wires of same length and area, made of two materials of resistivity ρ_1 and ρ_2 are connected in parallel V to a source of potential. The equivalent resistivity for the same length and area is
   (a) $\rho_1 + \rho_2$ (b) $\frac{\rho_1\rho_2}{\rho_1+\rho_2}$
   (c) $\frac{(\rho_1+\rho_2)}{\rho_1\rho_2}$ (d) $|\rho_1 - \rho_2|$
9. Calculate the current flows through the 10 Ω resistor in the following circuit.

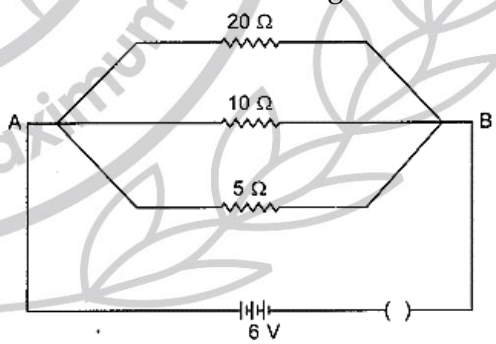

   (a) 1.2 A (b) 0.6 A
   (c) 0.2 A (d) 2.0 A
10. Two resistors are connected in series gives an equivalent resistance of 10 Ω. When connected in parallel, gives 2.4 Ω. Then the individual resistance are
    (a) each of 5 Ω (b) 6 Ω and 4 Ω
    (c) 7 Ω and 4 Ω (d) 8 Ω and 2 Ω
11. A cell, a resistor, a key, and an ammeter are arranged as shown in the circuit diagrams.

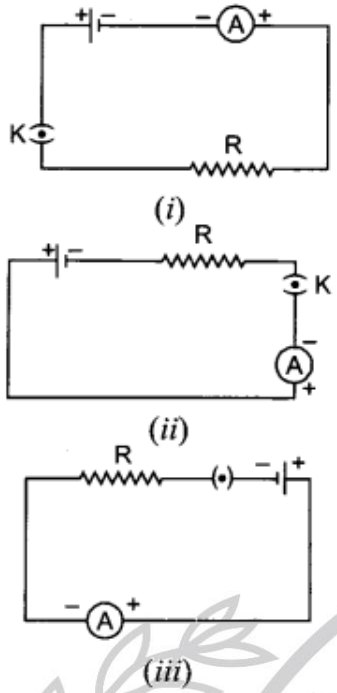

The current recorded in the ammeter will be
(a) maximum in (i)
(b) maximum in (ii)
(c) maximum in (iii)
(d) same in all the cases

12. A current of 1 A is drawn by a filament of an electric bulb. Number of electrons passing through a cross-section of the filament in 16 seconds would be roughly
(a) 10^{20} (b) 10^{16} (c) 10^{18} (d) 10^{23}

13. A cylindrical conductor of length l and uniform area of cross-section A has resistance R. Another conductor of length 2l and resistance R of the same material has area of cross-section
(a) A/2 (b) 3A/2
(c) 2A (d) 3A

14. A student carries out an experiment and plots the V-I graph of three samples of nichrome wire with resistances R_1 R_2 and R_3 respectively. Which of the following is hue?

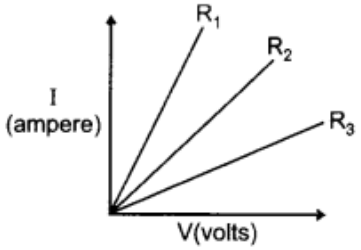

(a) $R_1 = R_2 = R_3$ (b) $R_1 > R_2 > R_3$
(c) $R_3 > R_2 > R_1$ (d) $R_2 > R_3 > R_1$

15. The resistivity does not change if
(a) the material is changed
(b) the temperature is changed
(c) the shape of the resistor is changed
(d) both material and temperature are changed

16. Electric potential is a:
(a) scalar quantity (b) vector quantity
(c) neither scalar nor vector
(d) sometimes scalar and sometimes vector

17. 1 mV is equal to:
(a) 10 volt (b) 1000 volt
(c) 10^{-3} volt (d) 10^{-6} volt

18. Coulomb is the SI unit of:
(a) charge (b) current
(c) potential difference (d) resistance

19. When electric current is passed, electrons move from:
(a) high potential to low potential.
(b) low potential to high potential.
(c) in the direction of the current.
(d) against the direction of the current.

20. The electrical resistance of insulators is
(a) high (b) low
(c) zero (d) infinitely high

21. Electrical resistivity of any given metallic wire depends upon
(a) its thickness (b) its shape
(c) nature of the material (d) its length

22. Which of the following is not correctly matched?

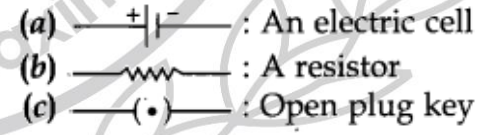

23. The resistivity of insulators is of the order of
(a) 10^{-8} Ω-m (b) 10^{1} Ω-m
(c) 10^{-6} Ω-m (d) 10^{6} Ω-m

24. Which of the following gases are filled in electric bulbs?
(a) Helium and Neon
(b) Neon and Argon
(c) Argon and Hydrogen
(d) Argon and Nitrogen

25. 100 J of heat is produced each second in a 4Ω resistor. The potential difference across the resistor will be:
(a) 30 V (b) 10 V (c) 20 V (d) 25 V